Step 1

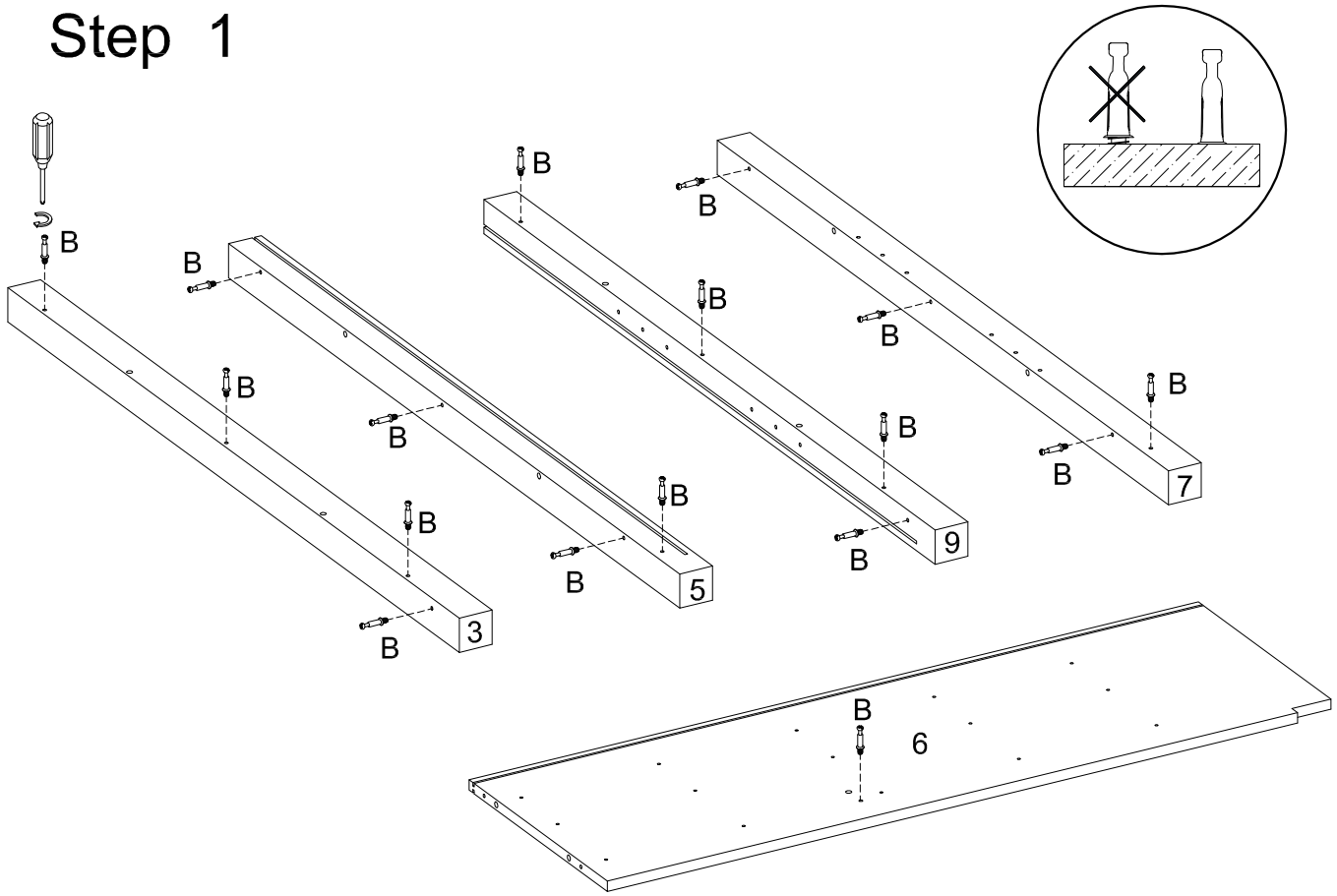

Step 2

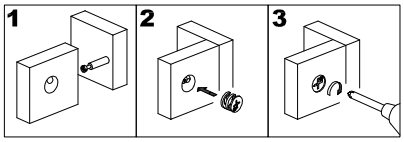

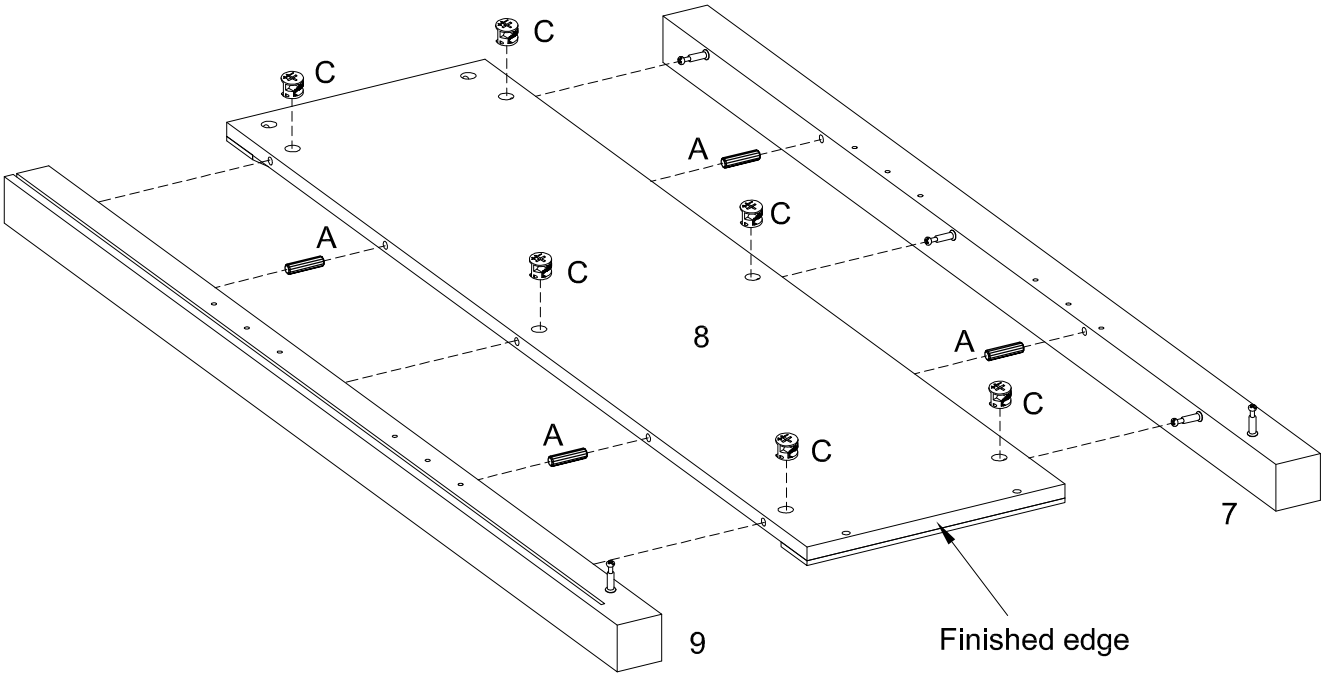

Step 3

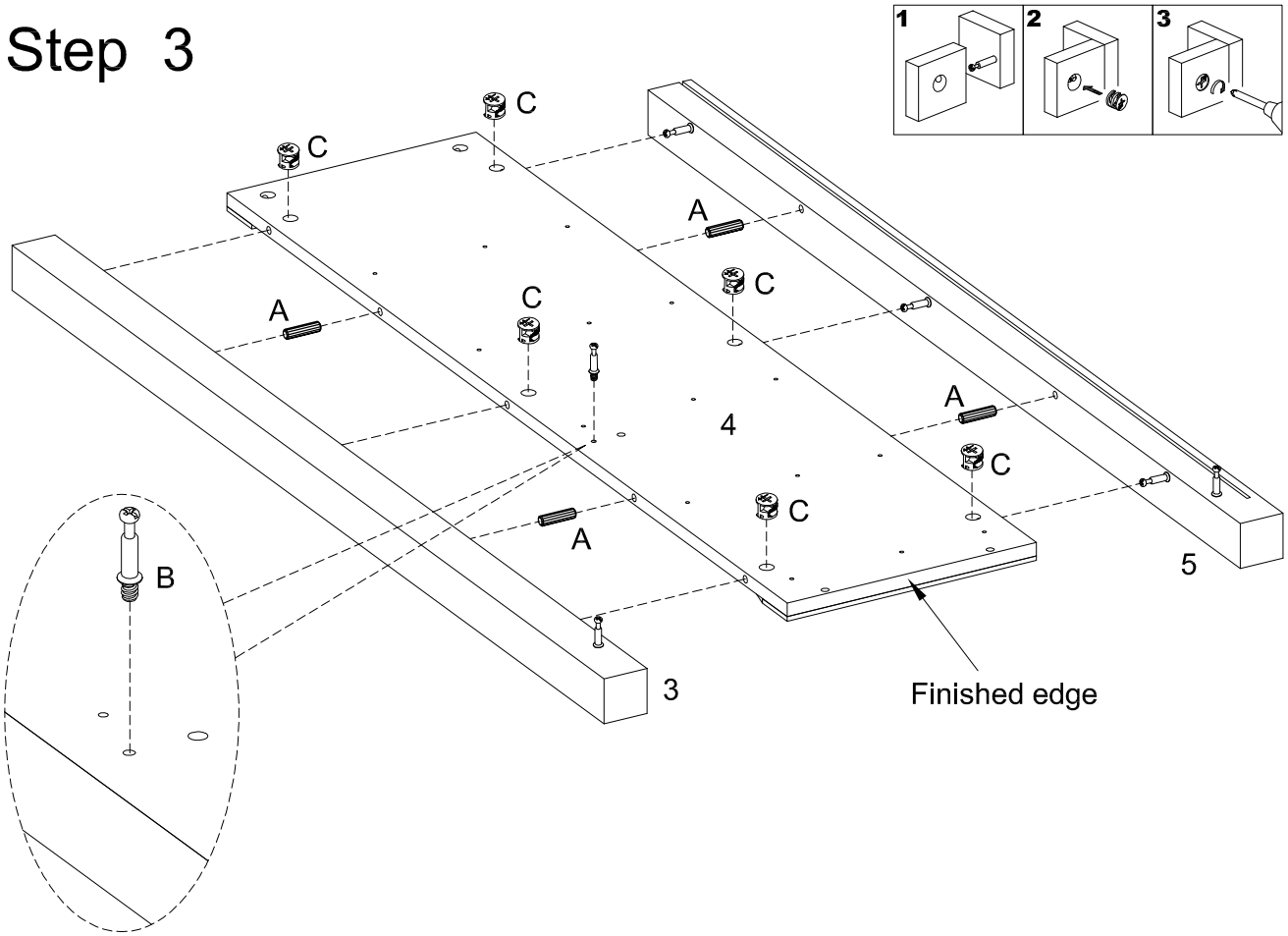
1
2
3
C
C
A
C
A
C
A
4
C
C
A
B
5
3
Finished edge

Step 4

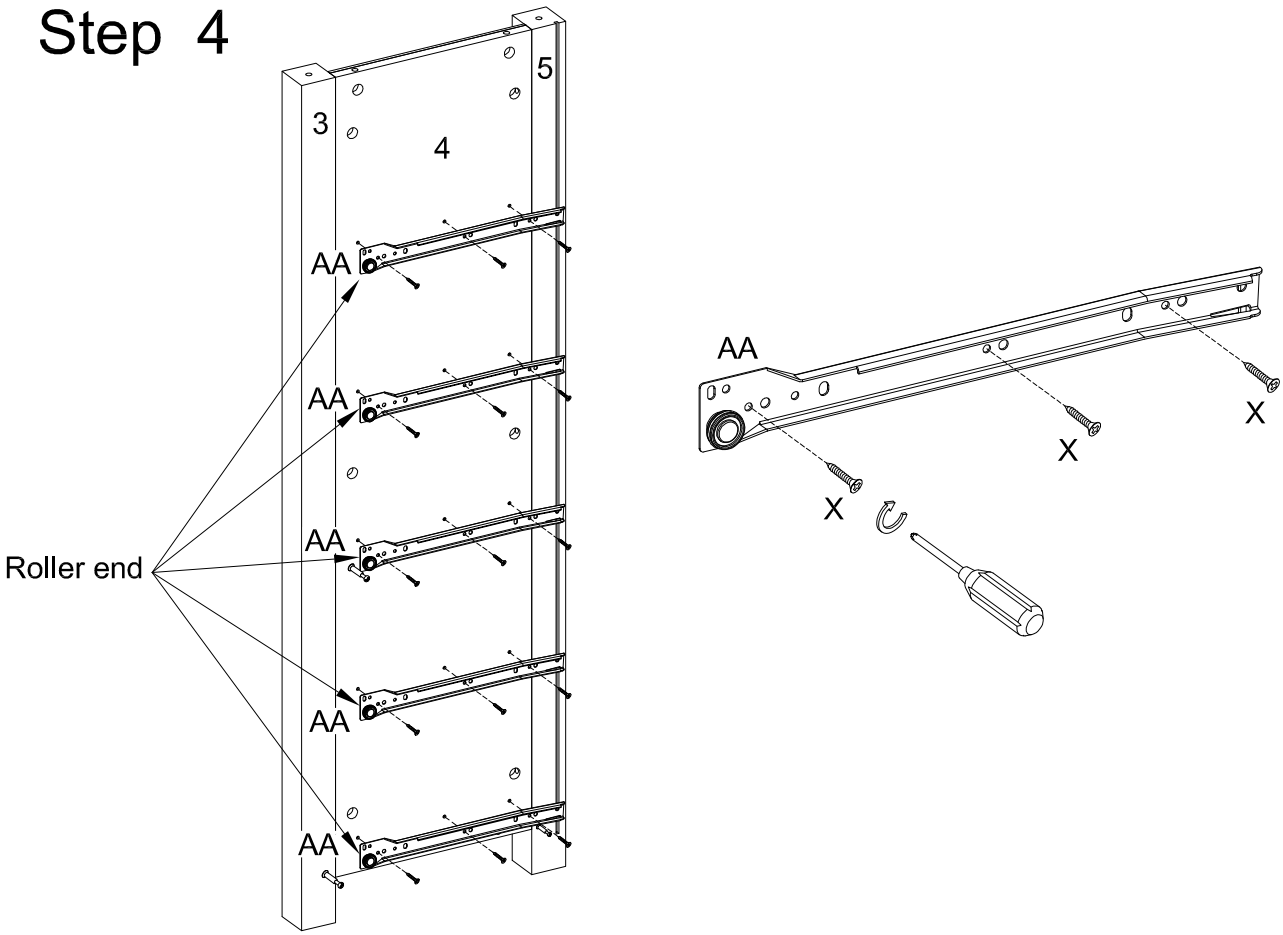
5
3
4
AA
AA
AA
AA
AA
Roller end
AA
X
X
X

Step 5

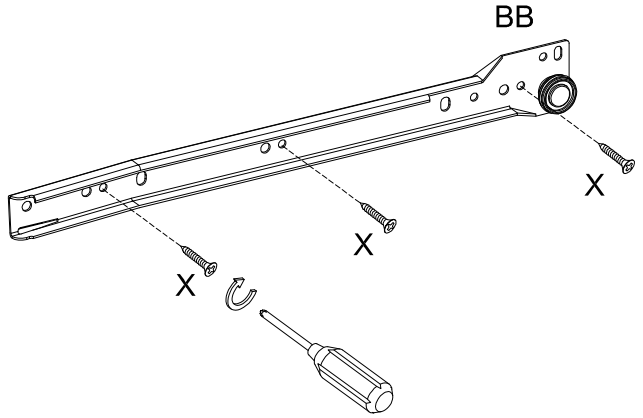

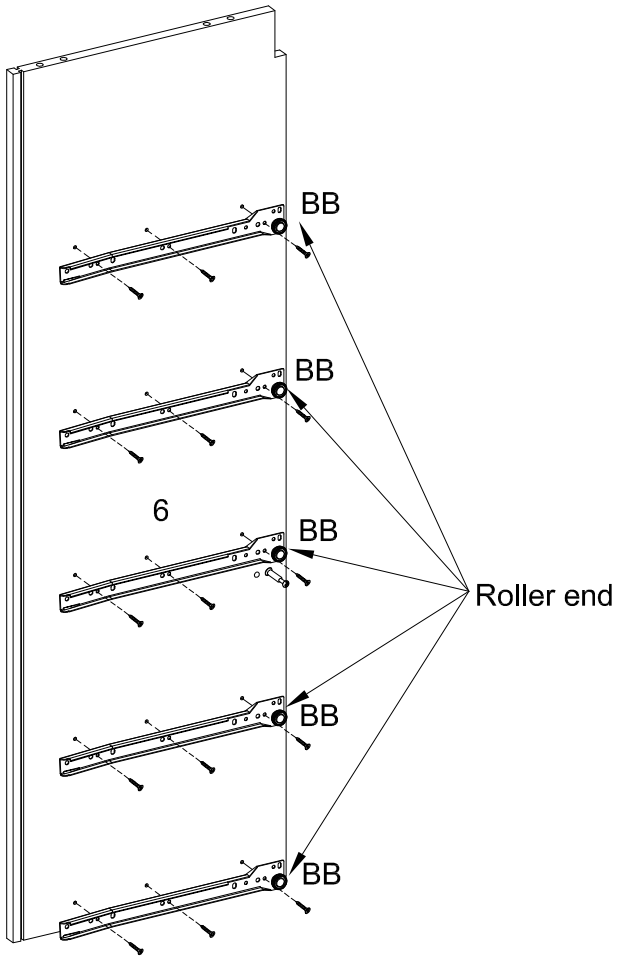

Step 6

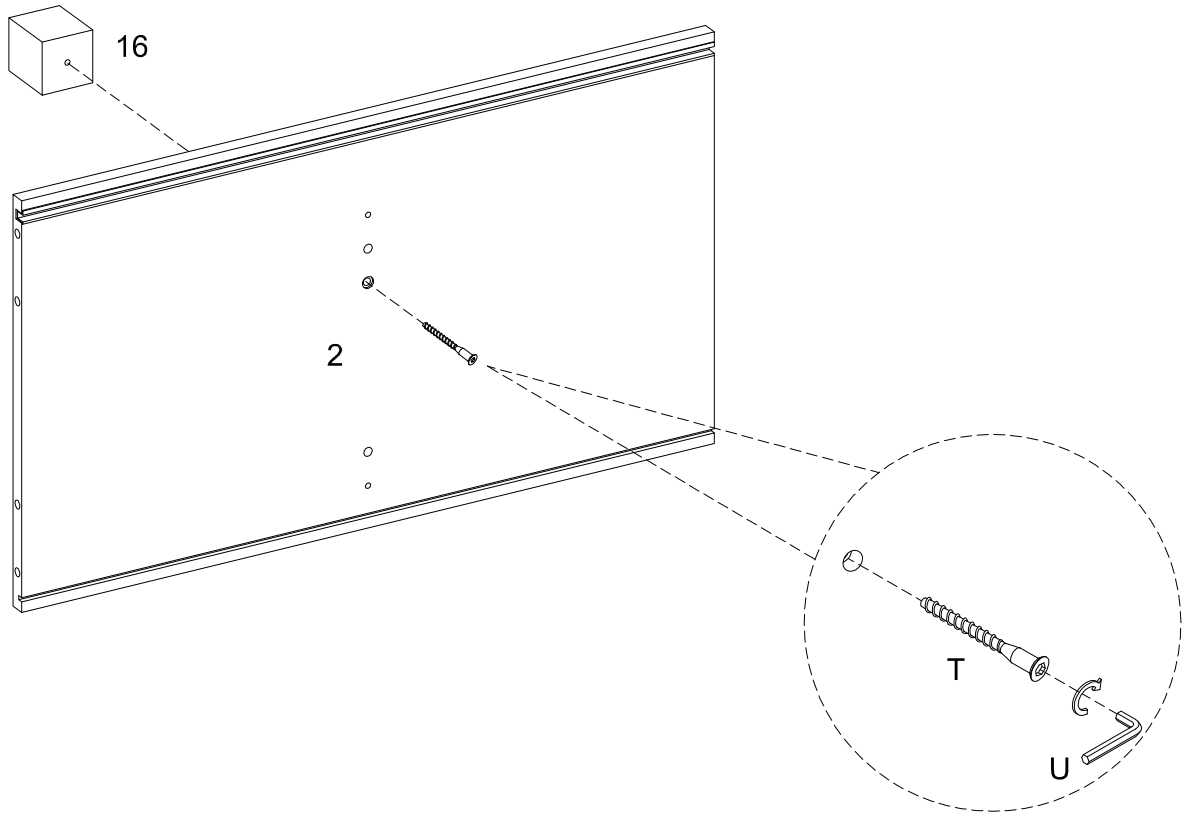

Step 7

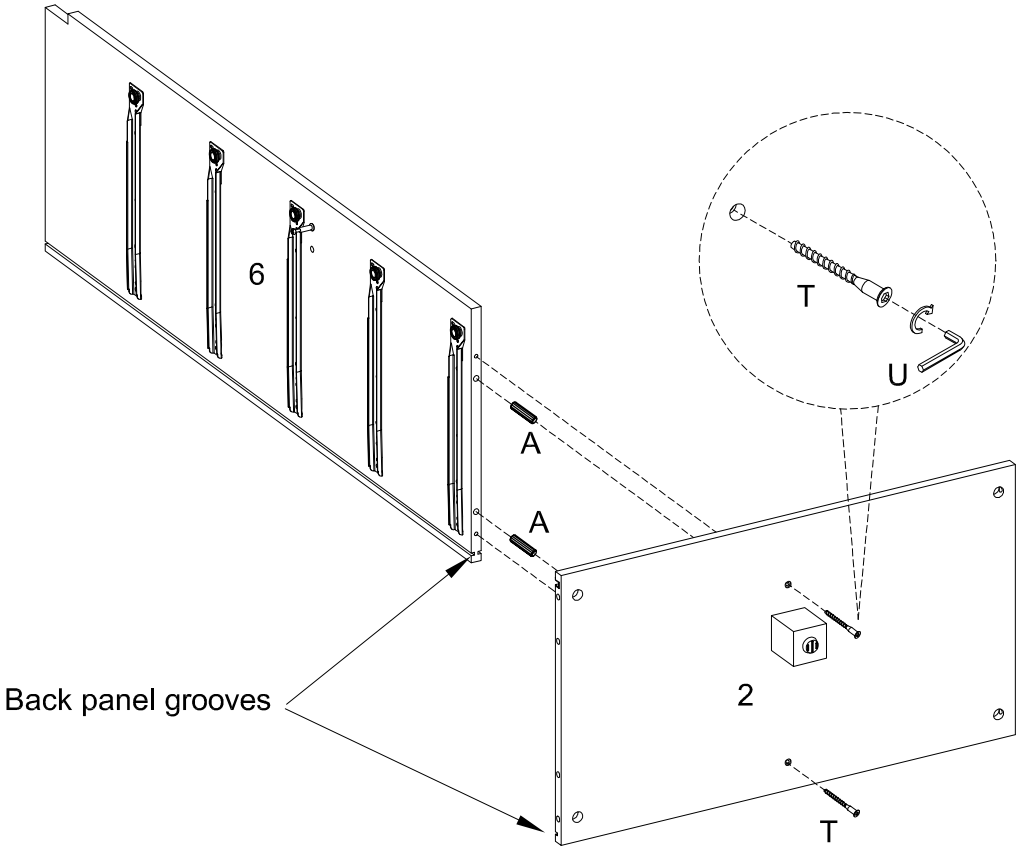

Step 8

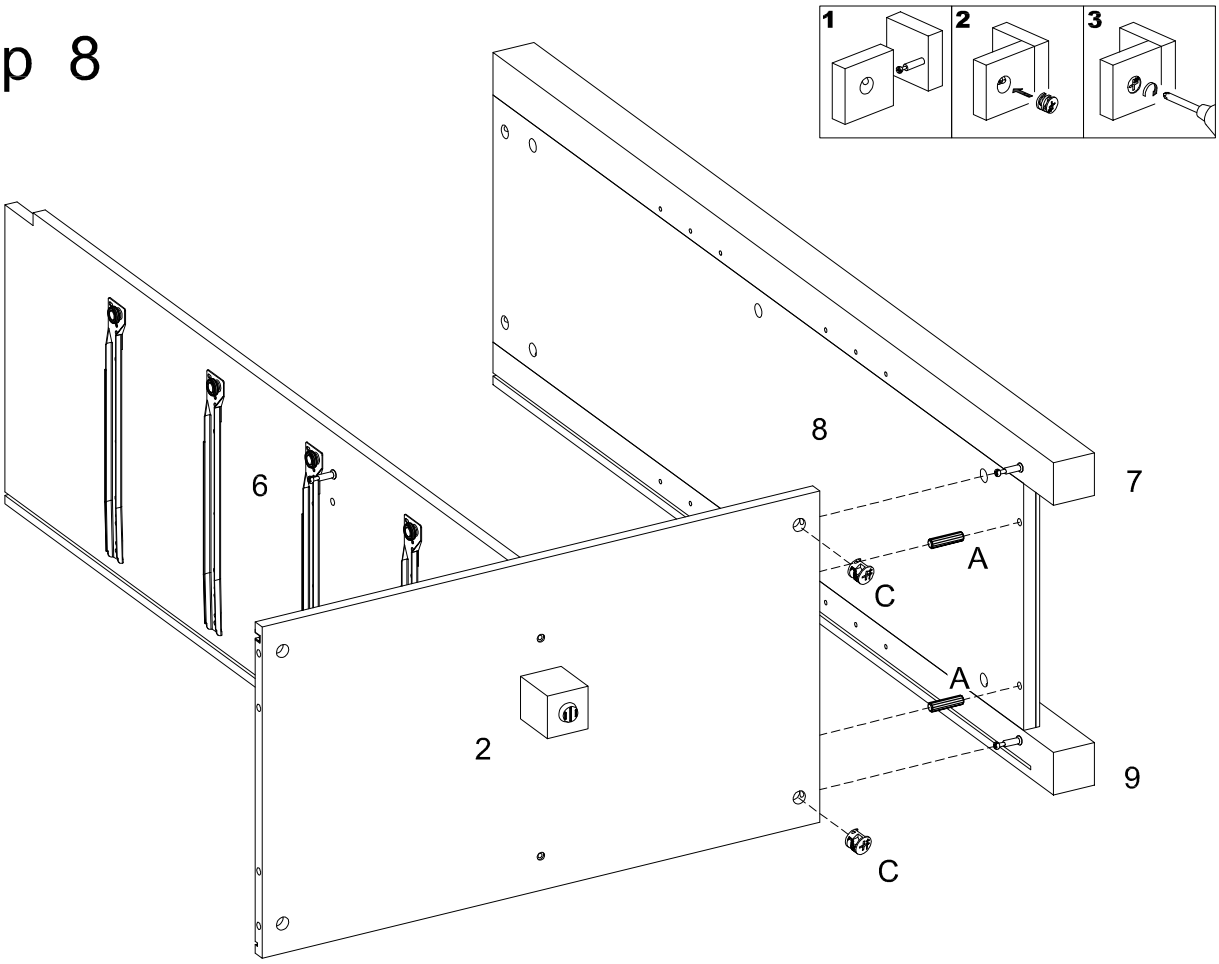

Step 9

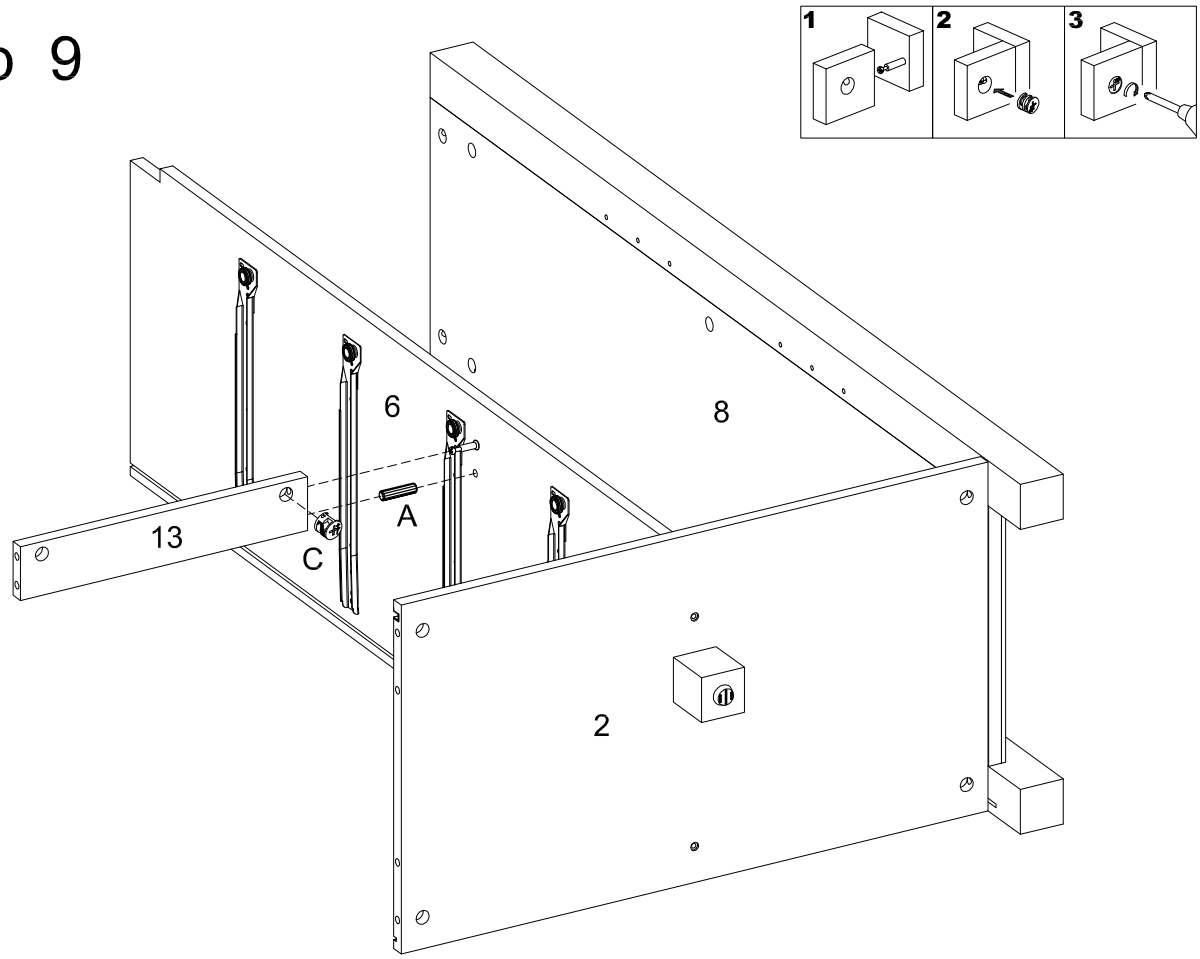

Step 10

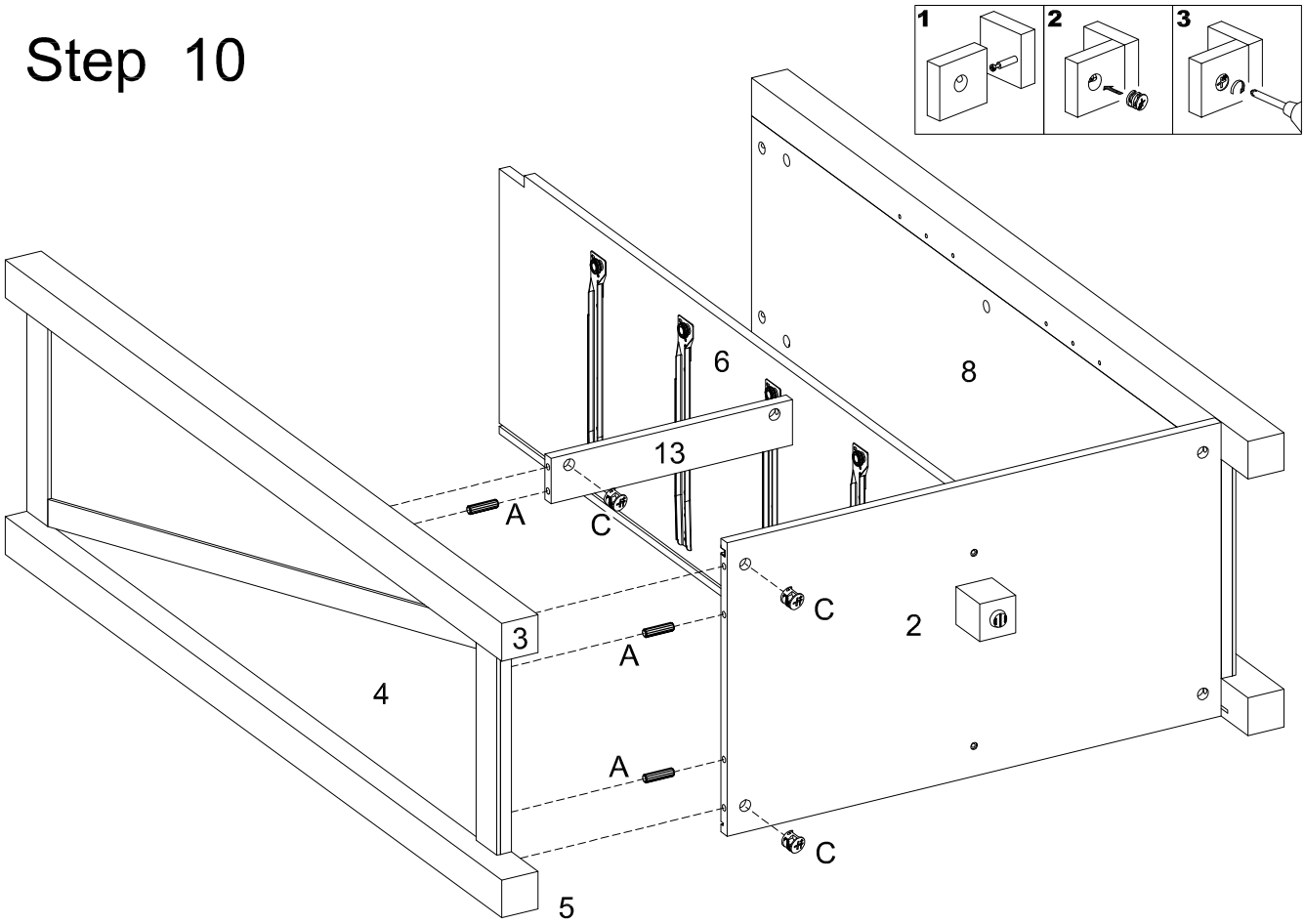

Step 11

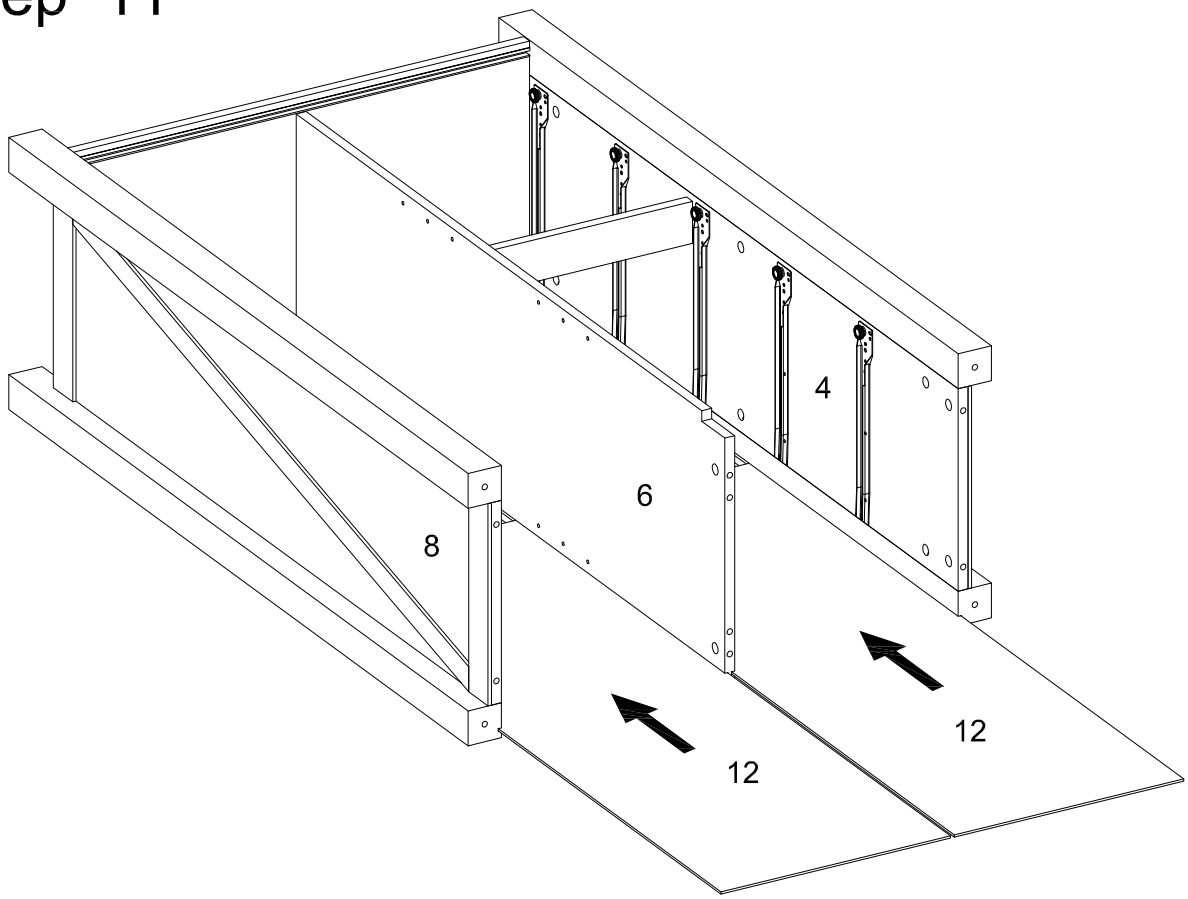

Step 12

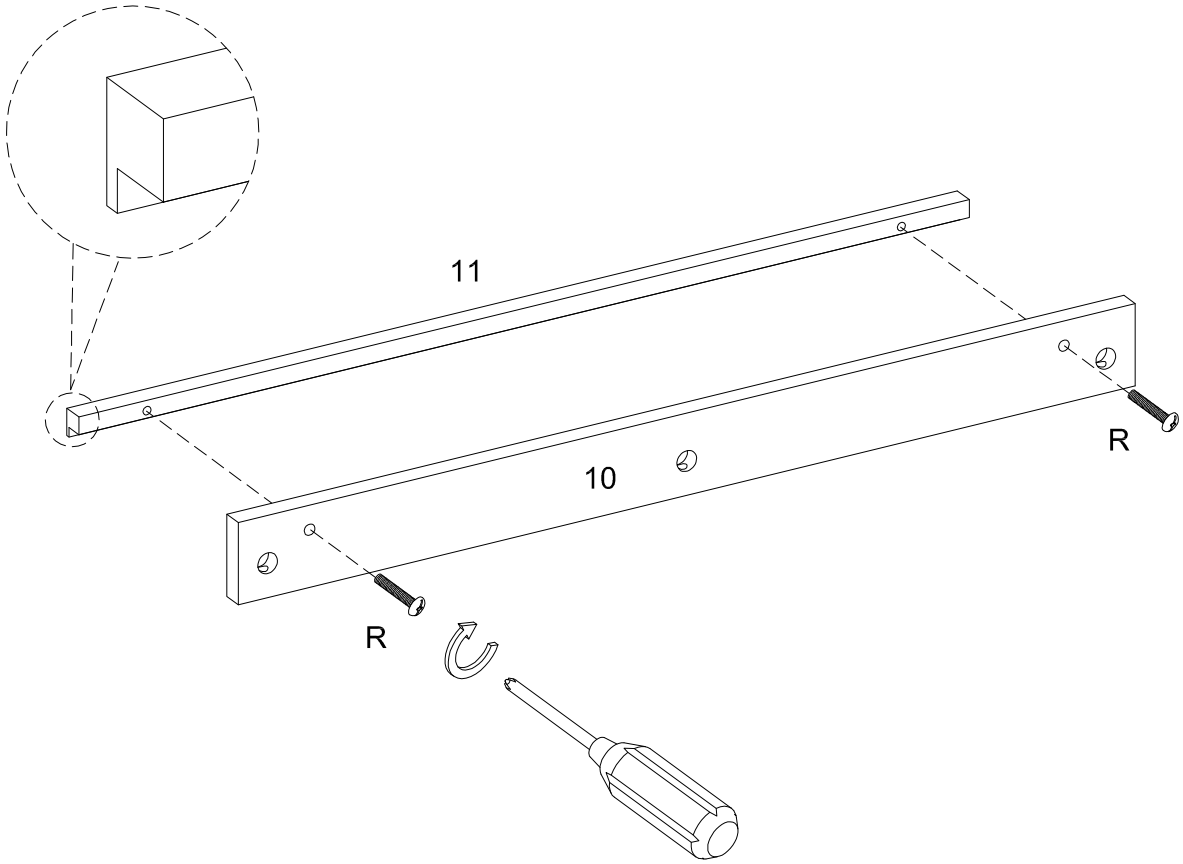

Step 13

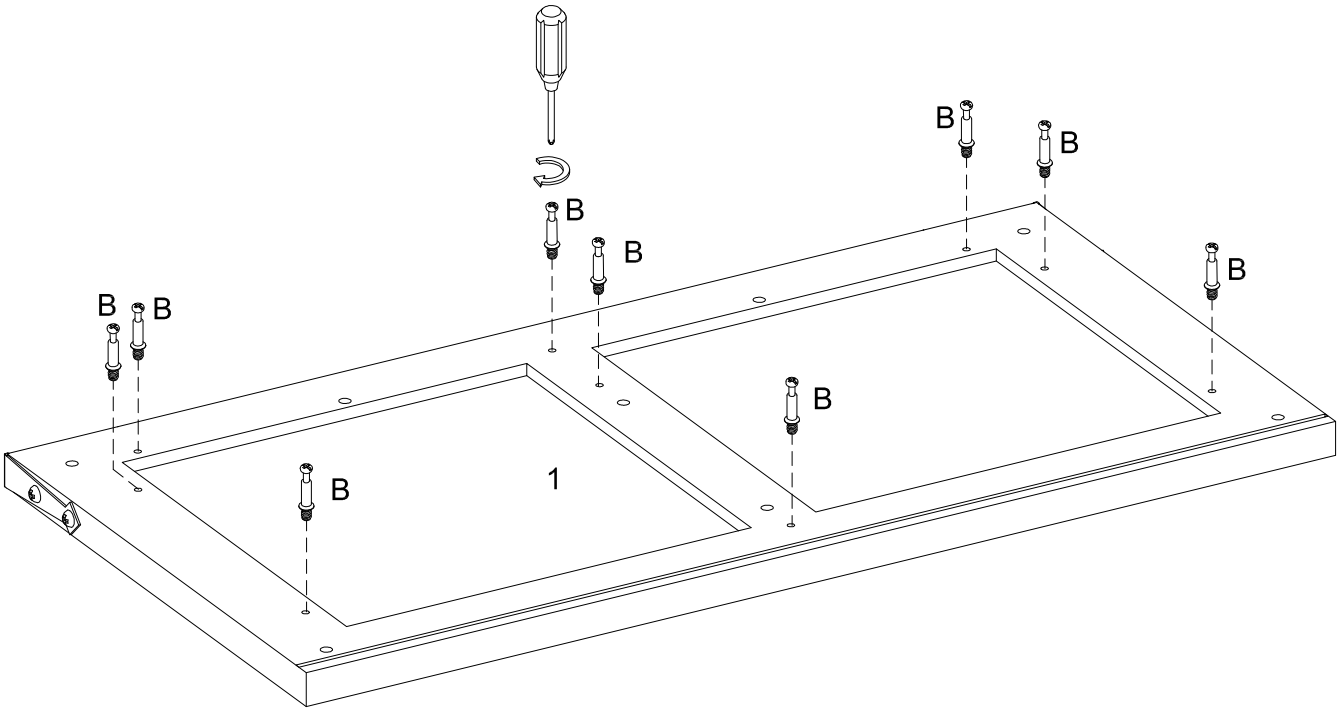

Step 14

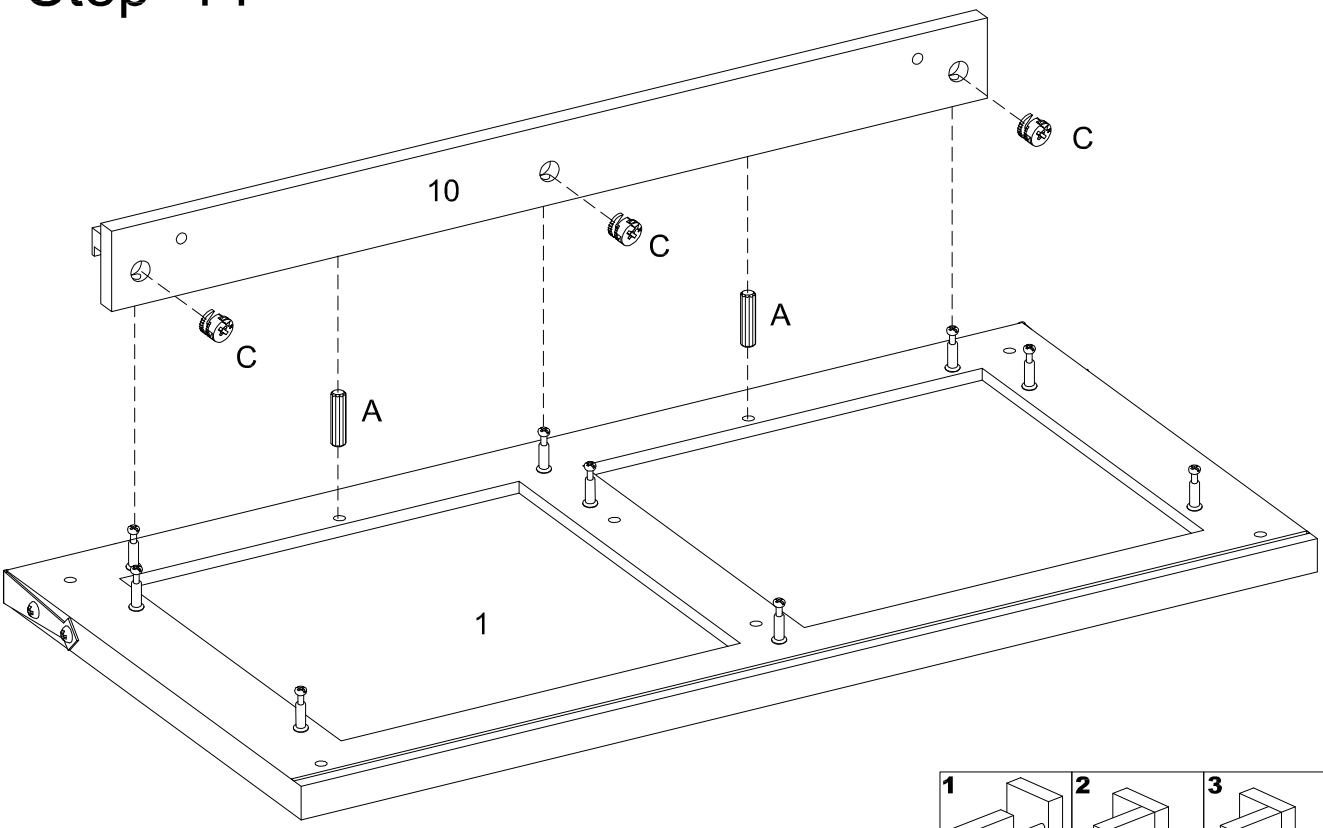

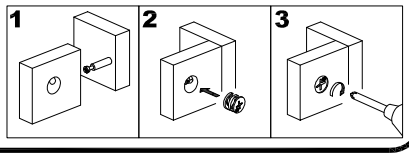

Step 15

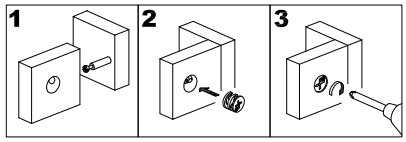

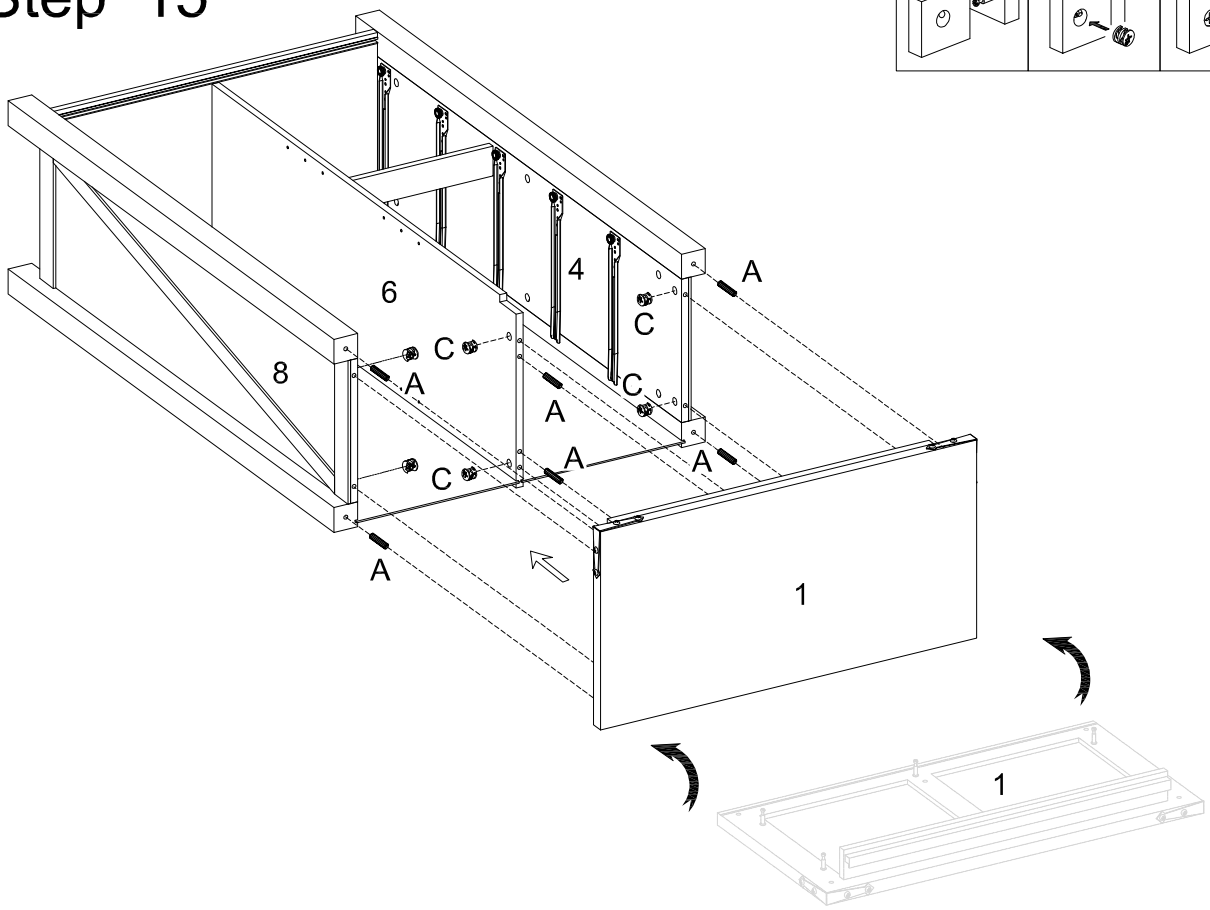

Step 16

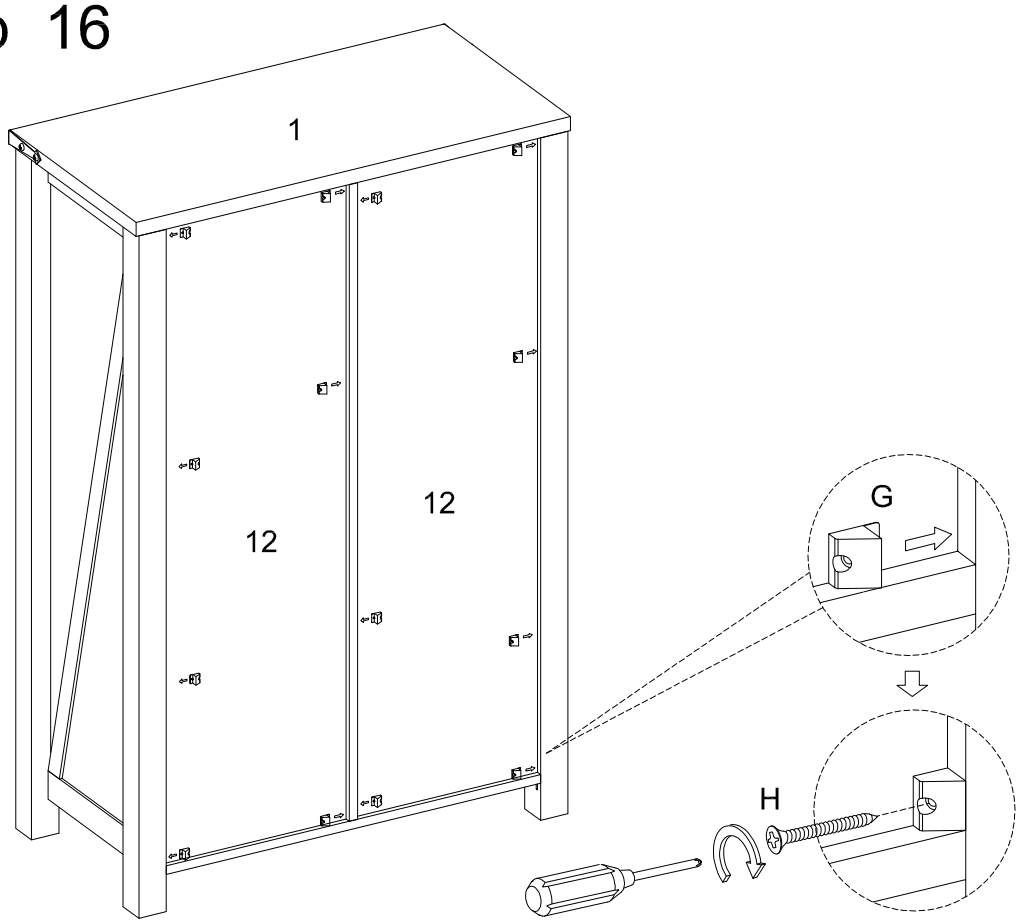

Step 17

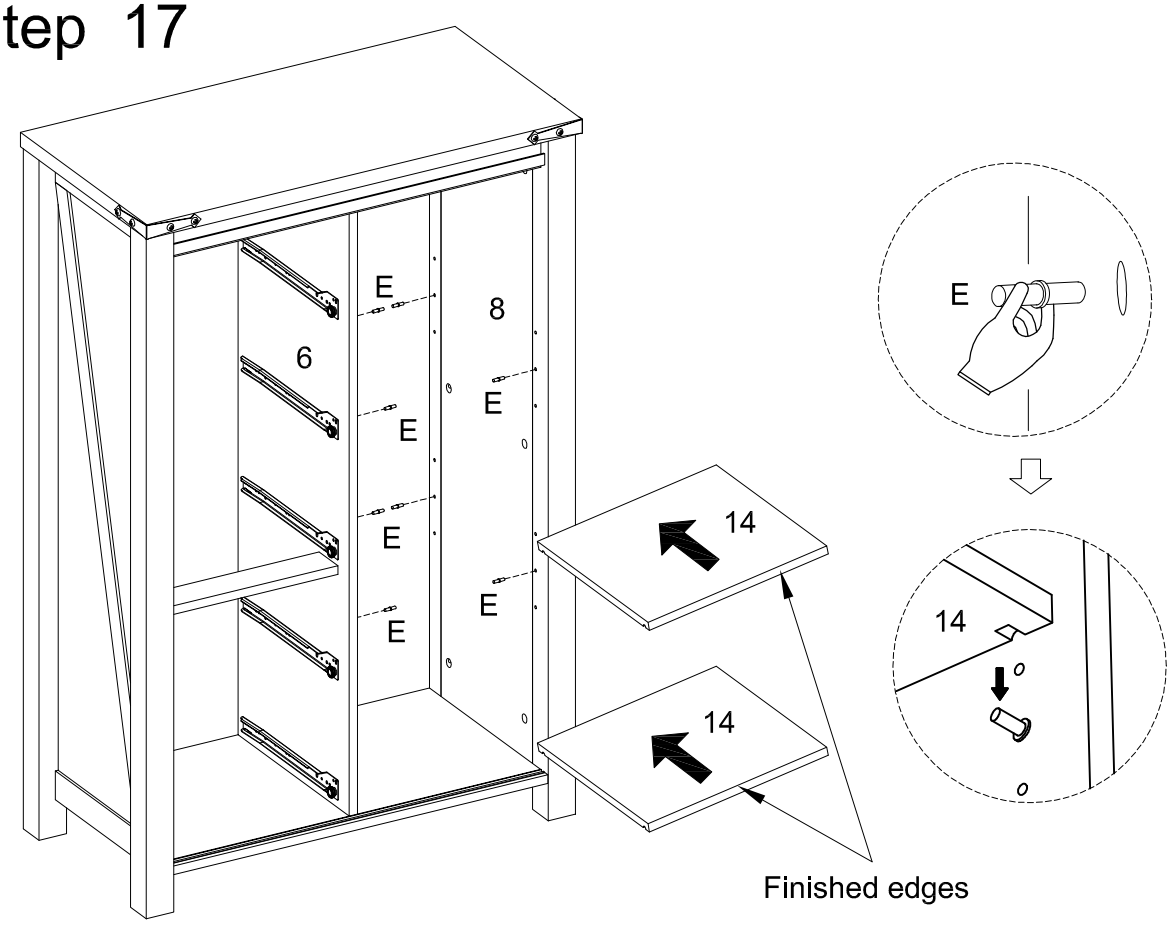

Step 18 x5

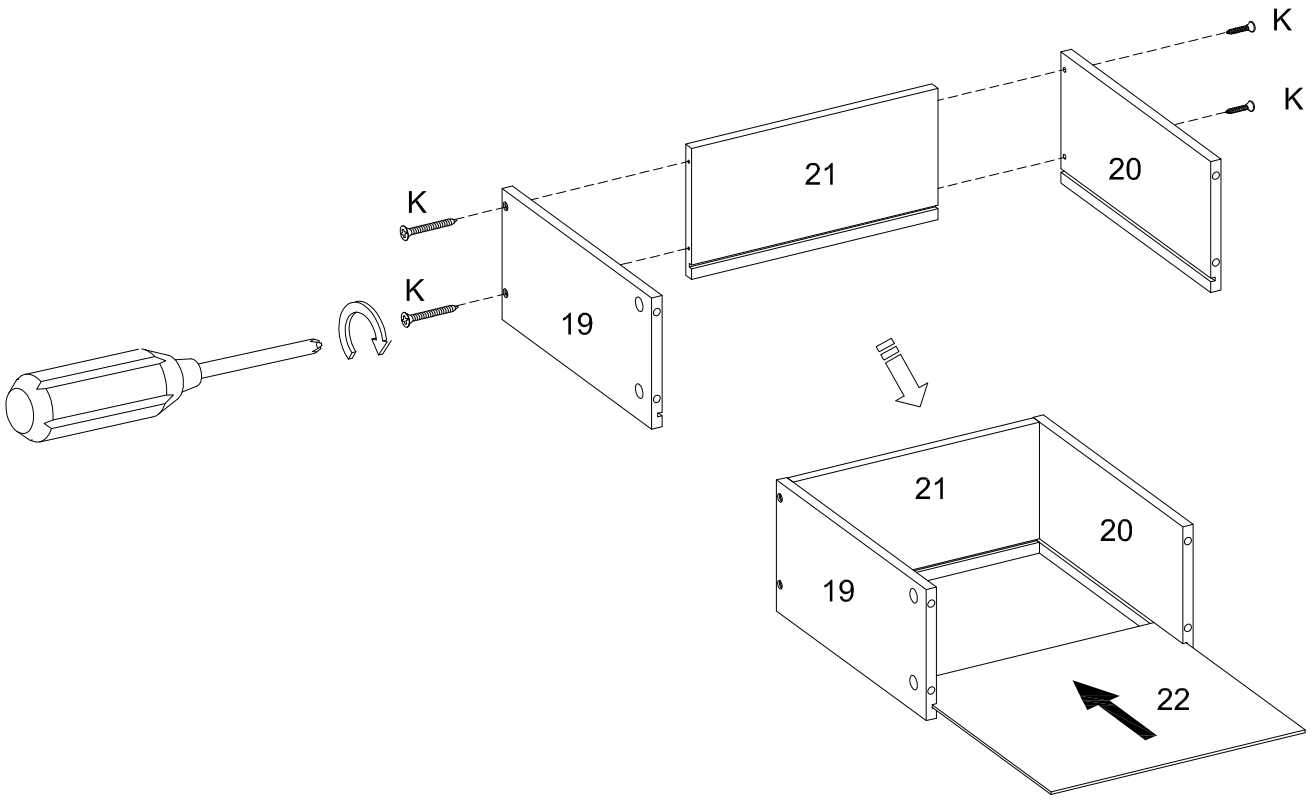

Step 19 x5

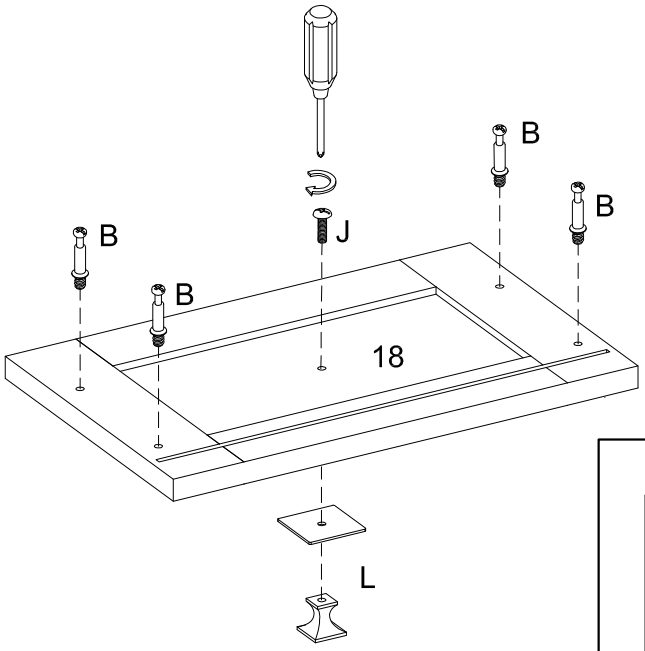

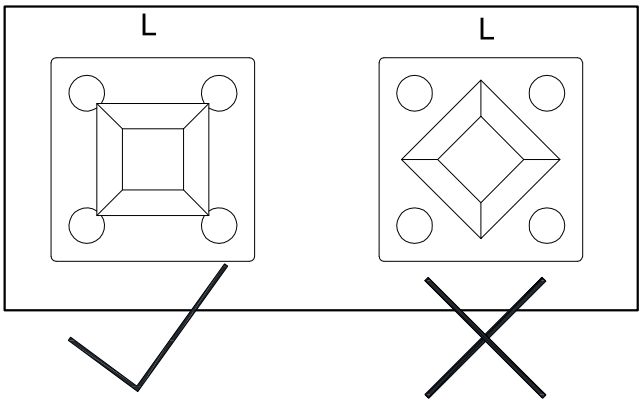

Step 20 x5

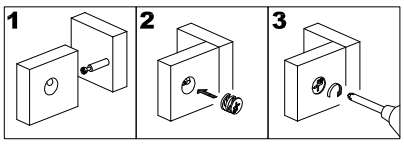

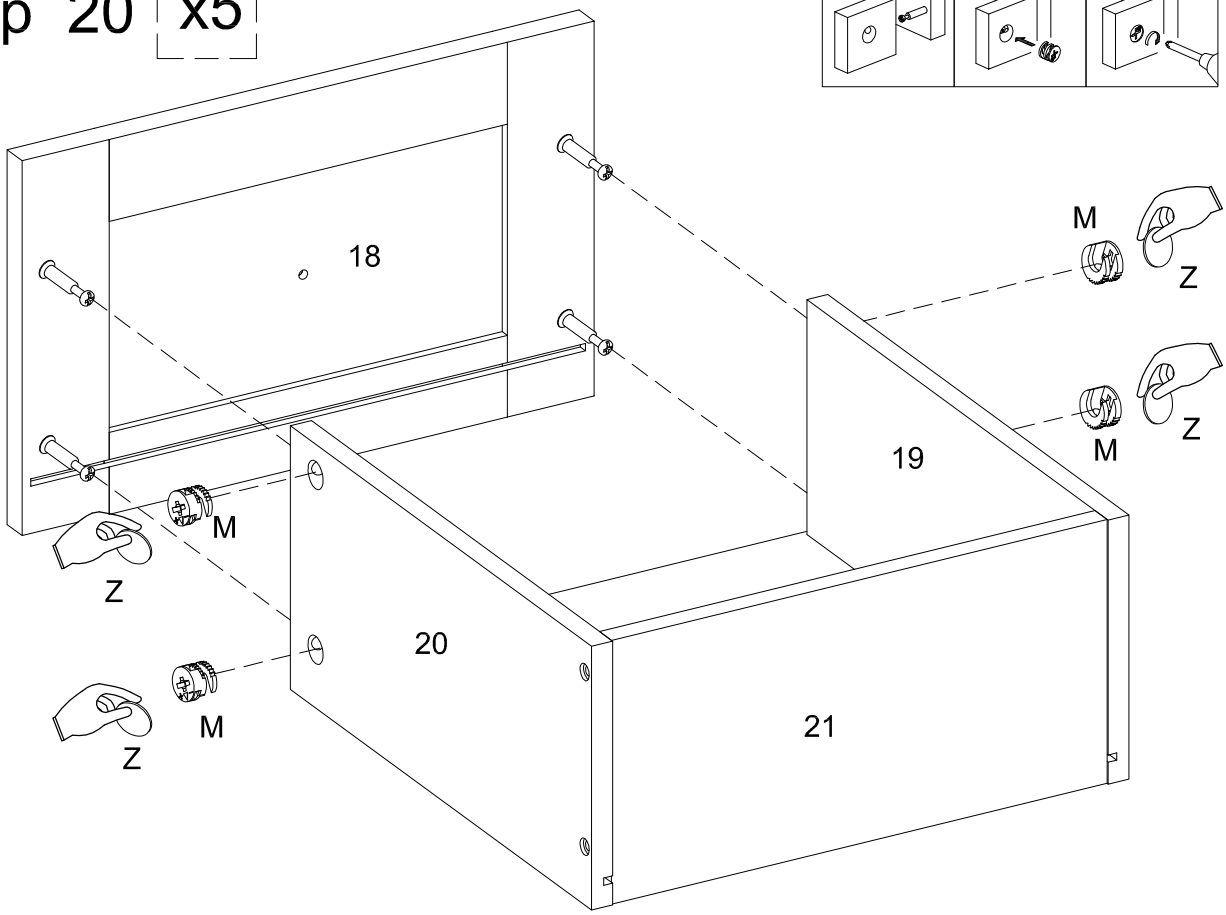

Step 21 x5

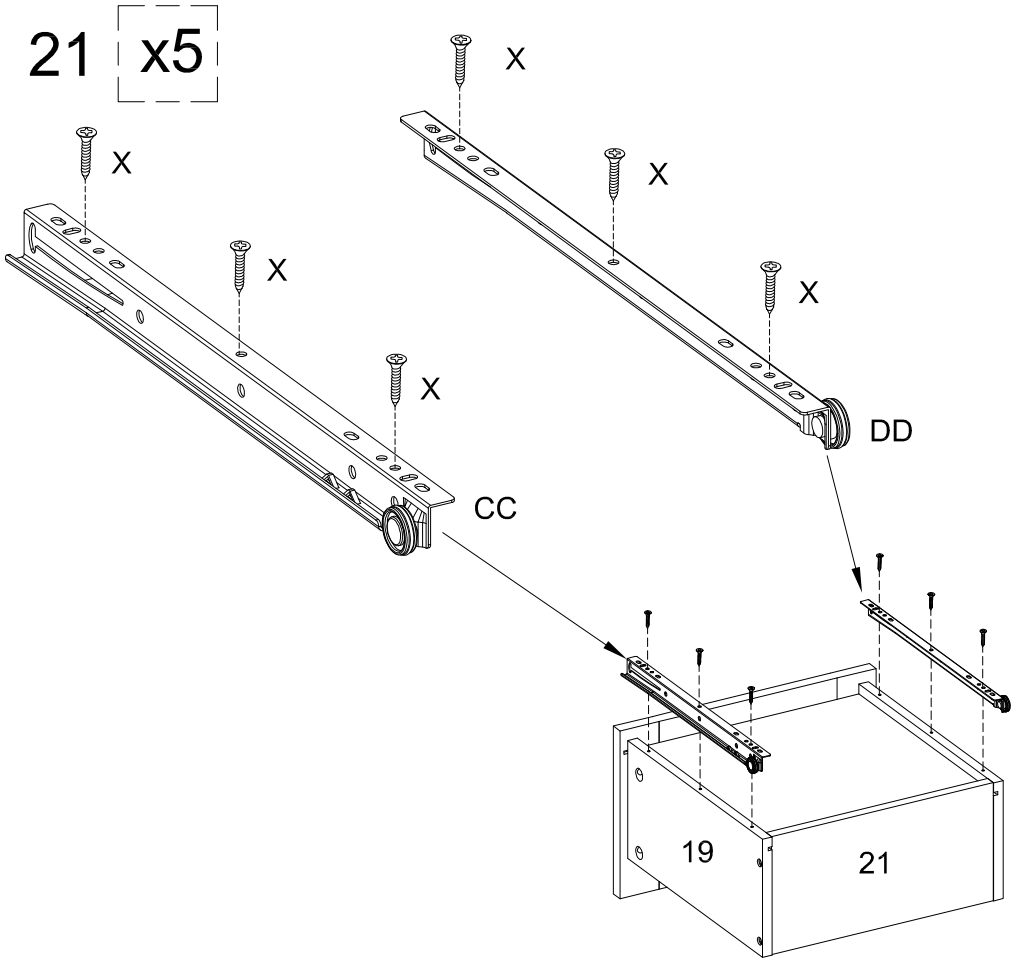

Step 22

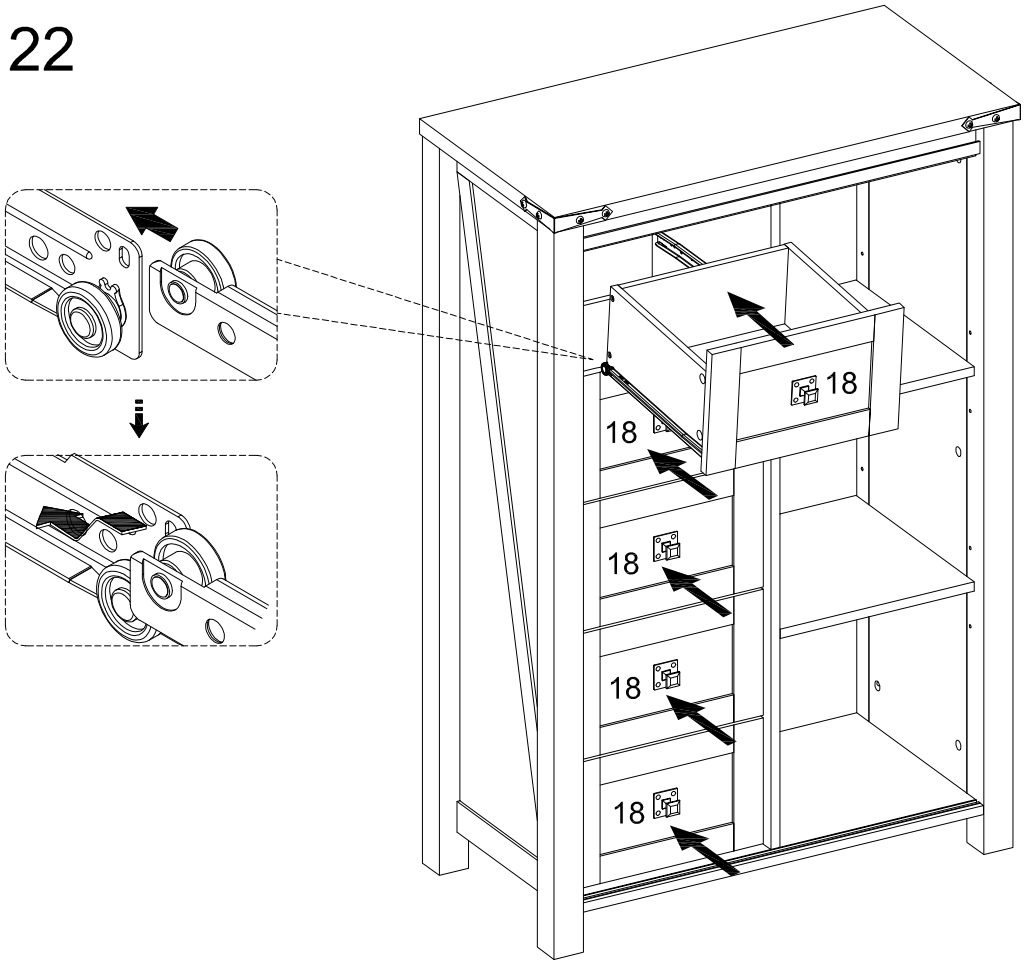

Step 23

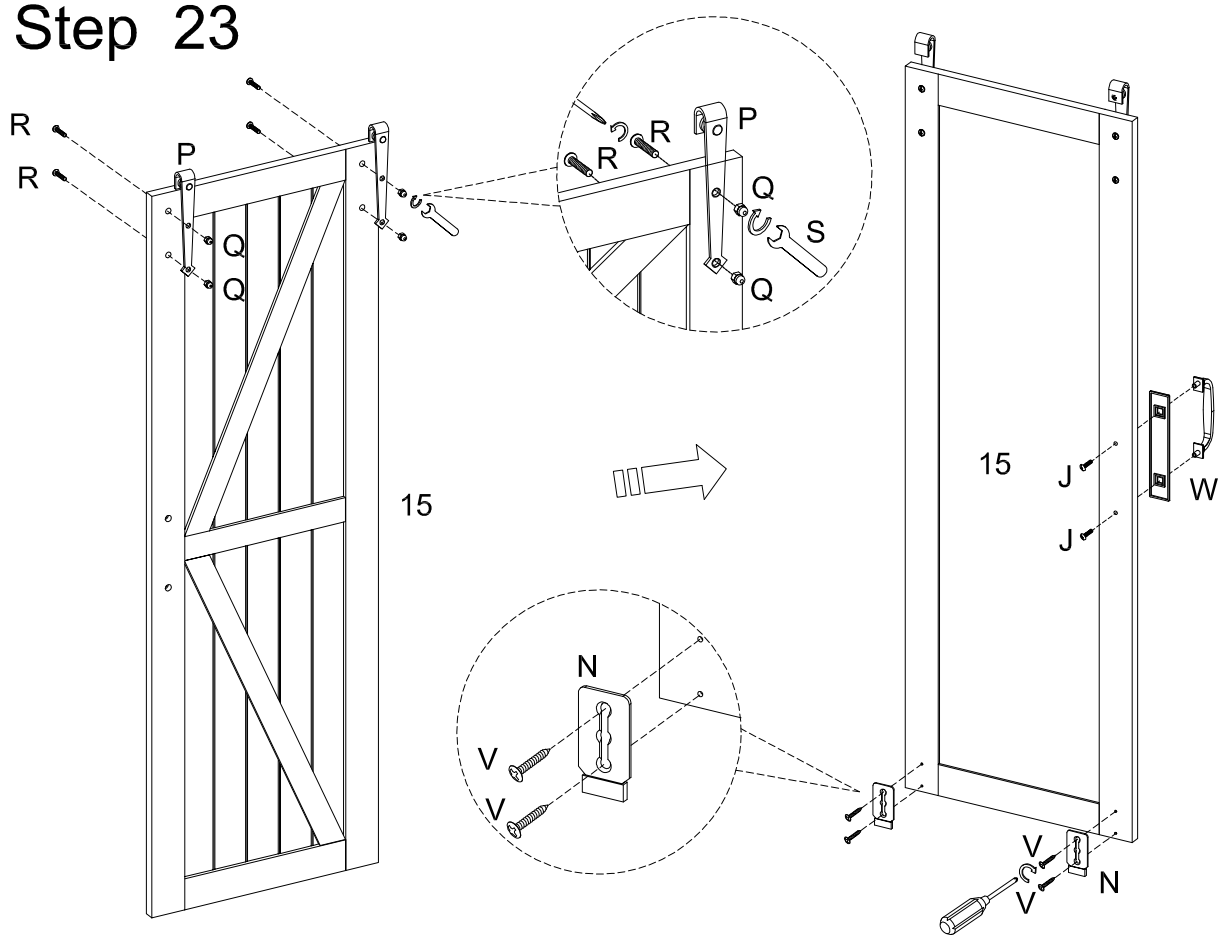

Step 24

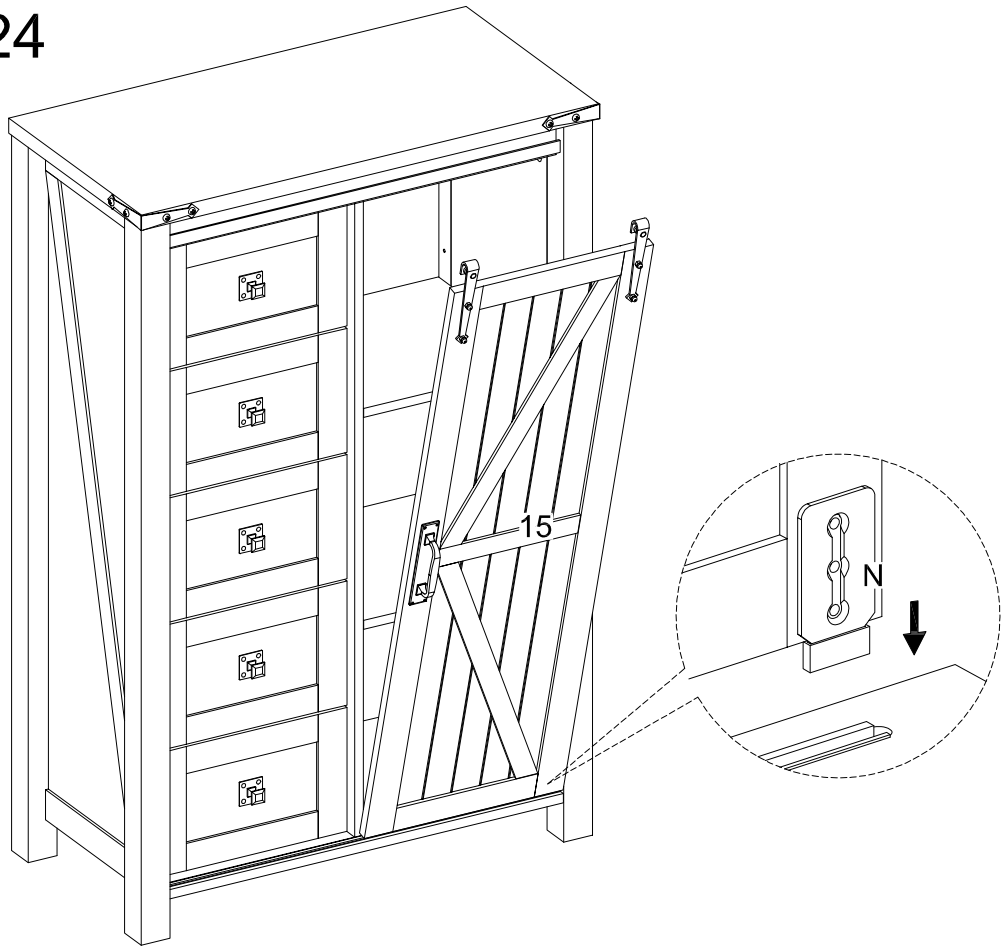

Step 25

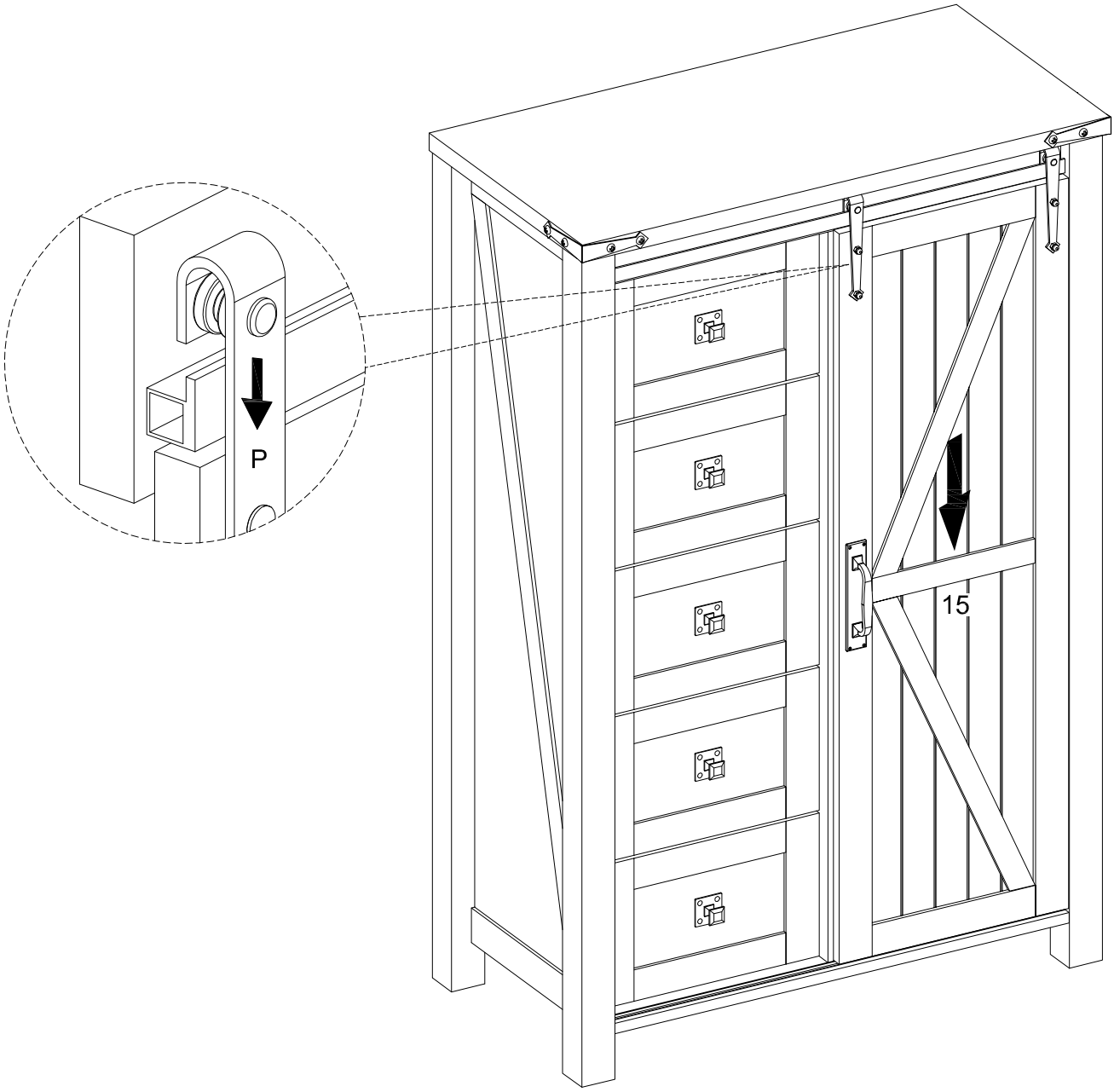

Step 26

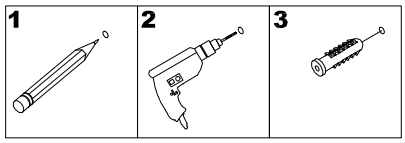

Serious or fatal injuries can occur from furniture tipping over. To prevent the furniture from tipping over we recommend that it is permanently fixed to the wall. Wall anchor and hardware are included with this product. Please make sure hardware is suitable for your walls before installing, as different wall materials may require different types of anchors.

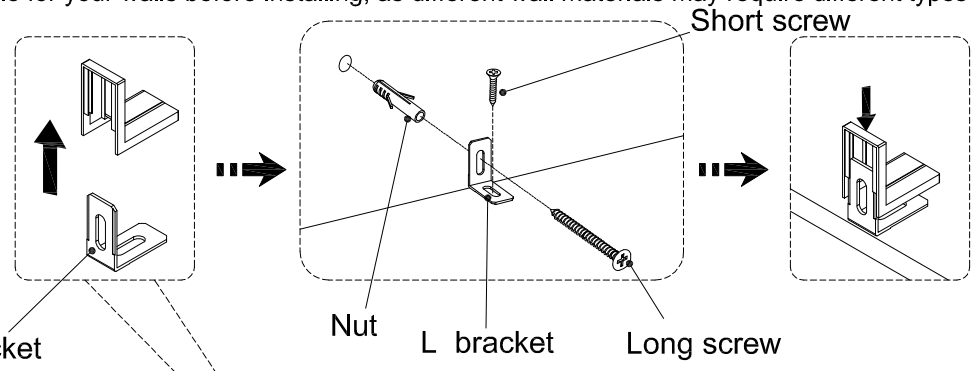

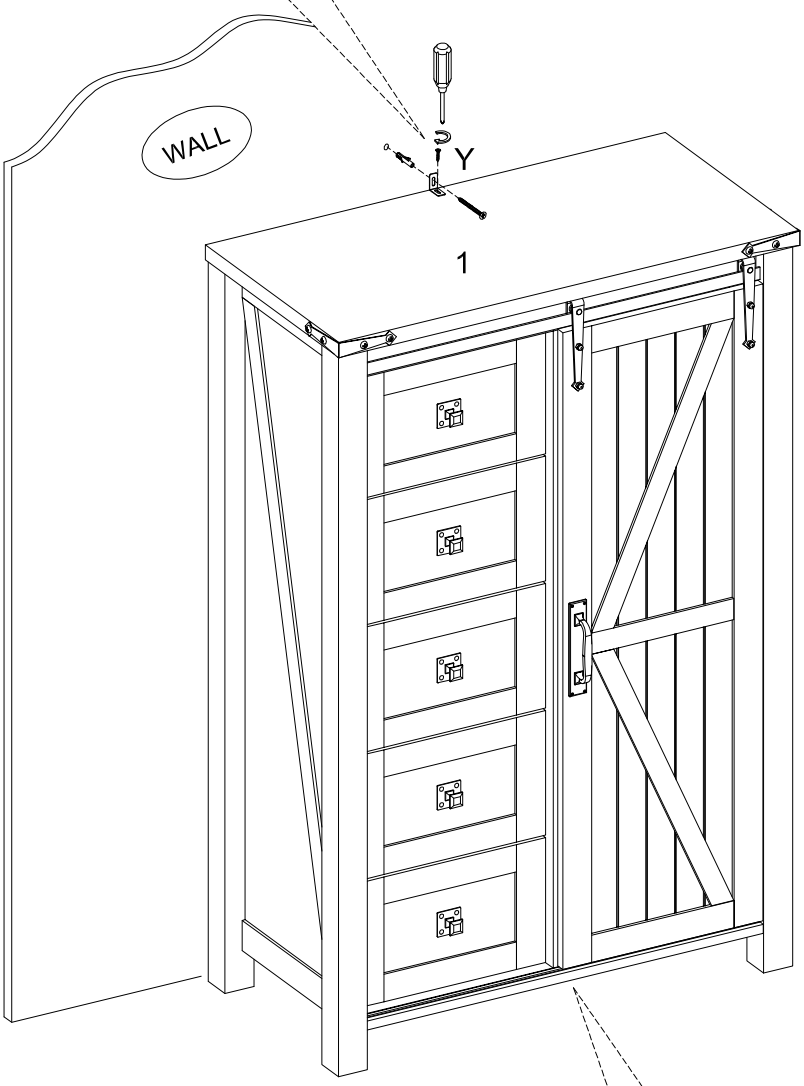

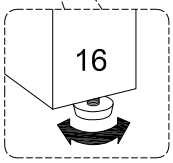

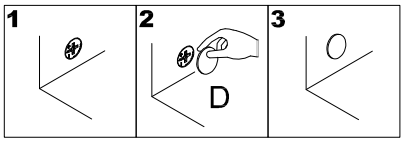

Final Assembly